Optical circuit switching for network test laboratory automation

White Paper

HUBER+SUHNER

Dynamic fiber layer management for network test laboratory automation

Rising demand for test capacity

Commercial, government and academic vendors and operators of network equipment are under intense pressure to rapidly test and deliver enhanced network services, validate new equipment, and indeed whole networks. They also need to be able to reproduce, diagnose and resolve customer issues quickly. To do this they need to get ever more out of their network system test resources.

As networks are migrating rapidly towards line rates of 800+ Gbps and beyond, and more connected devices and equipment are required to deliver today's service offerings, the network test lab is becoming increasingly complex and expensive.

Challenge for automation

In today's rapidly evolving business climate, automating system test infrastructure and resources to increase utilization while reducing costs is critical. However, just using traditional layer 2/3 infrastructure to interconnect equipment test beds adds complexity, is prohibitively expensive, and equipment needs to be upgraded every time traffic speeds or formats change. Furthermore with such equipment, packets are retimed and retransmitted and subject to latency, potentially distorting test results.

The solution

In place of traditional interconnects, the integration of optical circuit switching provides a transparent, user-configurable fiber layer that is fully independent of test traffic formats or bit rates. This allows network test beds to be reconfigured in seconds rather than hours or days, thereby allowing customers to meet challenging test cycle turnaround times, increasing the efficiency of their labs.

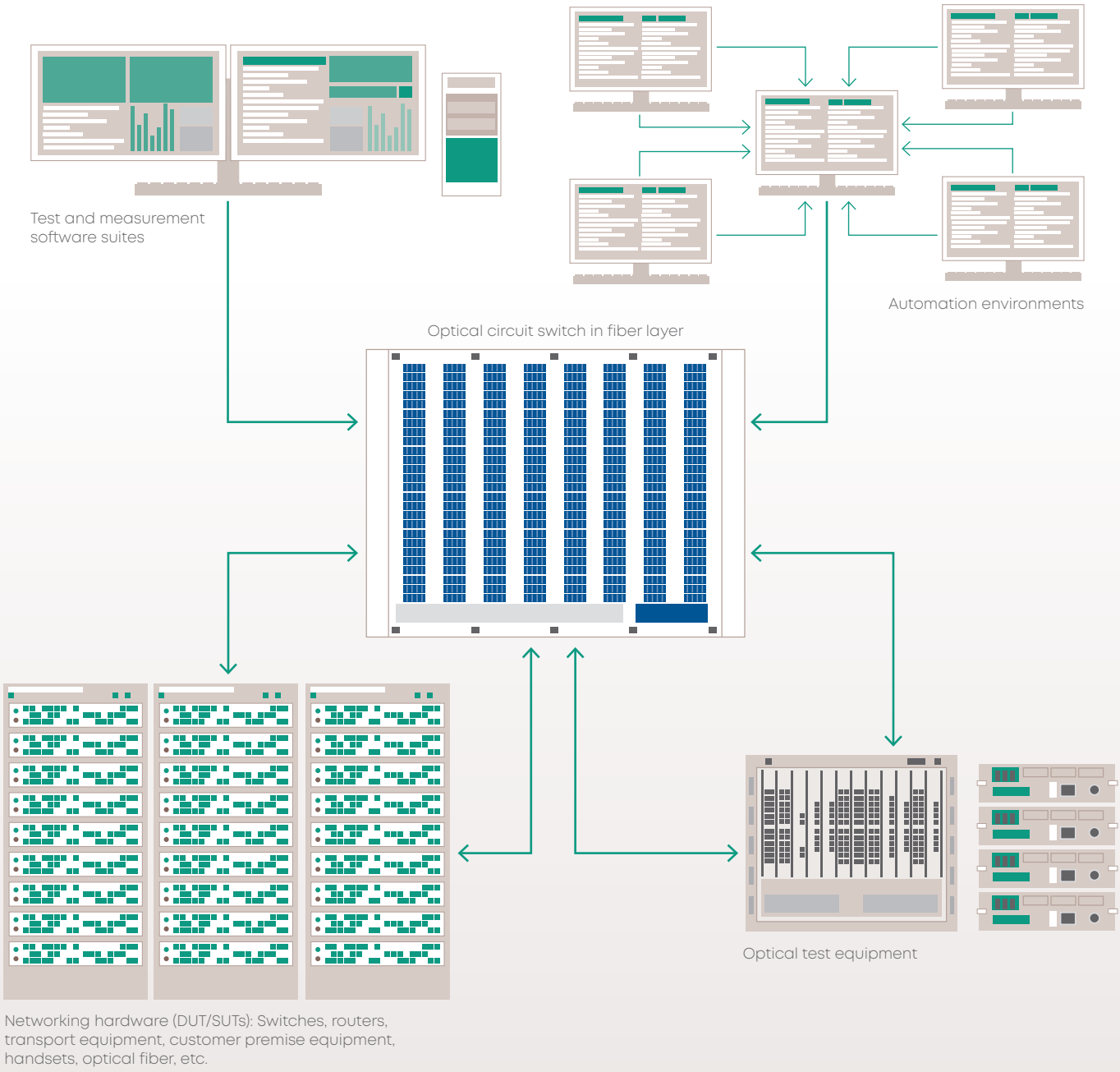

Benefits

Automating the lab infrastructure means that the test process can be operated remotely and enable the provision of Lab-as-a-Service (LaaS).

Once considered a luxury, and now both a necessity and requirement, remote lab management is a critical part of system test lab operations. Whether driven by recent changes in working practices, the need to reduce the number of test labs or the desire to leverage a geographically diverse workforce, many organizations now require the ability to remotely manage network test labs and complete test cycles, round the clock. POLATIS® optical circuit switching allows system test resources to be remotely interconnected and easily shared across multiple test topologies in 'production-like' environments simultaneously, without concern for conflict between different test groups. Test environments can be set up, modified and recalled rapidly without the need for manual intervention reducing the opportunity for human error.

The introduction of optical circuit switching to the network test lab environment brings tremendous flexibility and cost-savings:

Reduced OPEX

With the ability to connect any port to any port through the optical circuit switch, equipment can be cabled once and tests can be configured instantly, saving roughly 75% of cabling time. Tests can be configured and conducted remotely in real time, typically halving overall test times so staffing and travel expenses are greatly reduced. For a large test lab or integration facility this can translate into savings of up to $1.5 million per annum.

Reduced CAPEX

Expensive test and network equipment can be shared across multiple tests and multiple lab environments, minimizing repeated high cost equipment purchases and saving on power and valuable rack space.

Typically the usage of devices under test (DUT) can increase by up to 200% and that of test and monitoring equipment by up to 300%, with CAPEX savings of 50% or more being achievable.

Improved accuracy and customer response time

All-optical connections are completely transparent with no packet processing, so tests are conducted with a high degree of accuracy and repeatability. Customer network configurations can be simulated on demand so that issues can be identified and resolved quickly.

Unlike packet switches, which are optical-electrical-optical (OEO) switches, signals are not retimed in optical circuit switches allowing users the ability to mimic and troubleshoot real time network deployments in the lab.

Future proof

Optical circuit switches are transparent to transmission wavelengths, direction, protocol and bit rate so the same switch can be used for any media and speed to 800 Gbps and beyond.

Compelling ROI

Payback is usually well under 18 months and can be as low as a few months.

Application

RF device testing with optical circuit switching

An optical circuit switch does not have to be used exclusively in a test lab where optical devices are under test. With the addition of a Radio Frequency over Fiber (RFoF) system you can also test RF devices.

In particular, the impact of 5G is forcing wireless providers and equipment manufacturers to scale up their testing as a large number of devices have to be connected to radios.

Traditionally, this would have been accomplished using coax cables and RF switches. The analogue nature of Radio Frequency over Fiber (RFoF) requires a switching infrastructure that does not degrade the RF signal. Using all-optical fiber cross-connects in place of RF switches can help telecoms providers to scale up and improve the quality of their testing.

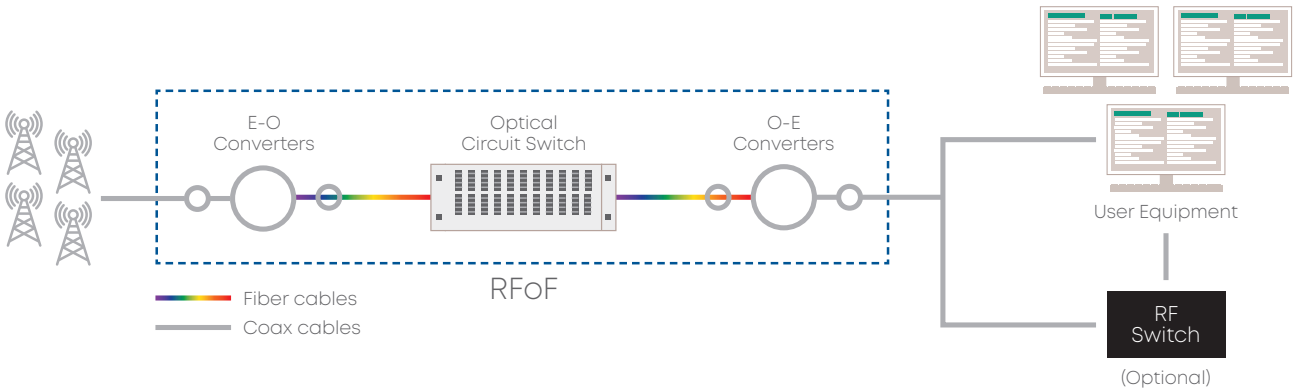

RFoF using optical circuit switching addresses some of the key challenges relating to RF:

- With fiber optics, transmission over a distance is not a limitation compared with using coax.
- More devices can be connected.
- Fiber is less expensive than coax cables.
- Topologies can be reconfigured at will and remotely.
- Fiber runs in test chambers do not interfere with anechoic chamber performance.
- RFoF with optical circuit switching creates a future-proof signal distribution architecture, able to switch any RF frequency now and in the future.
- The cost of optical circuit switches does not increase exponentially with port count, unlike with RF switches.

Conclusion

As telecom networks and data centers evolve, testing of more complex configurations at higher speeds is critical for system-wide deployment. The introduction of optical circuit switching can greatly simplify the configuration of advanced testing environments, fundamentally changing the economics of Lab-as-a-Service and network system test lab operations and representing a future-proof investment.

An automated test lab with an optical circuit switch is therefore a powerful and worthwhile proposition for those that are keen to ensure they are future ready and want to keep up with the demand which 5G and other technological developments are creating within the industry. With the addition of an RFoF system, the ability also to test RF devices only serves to increase the commercial viability of the test lab.

The POLATIS® advantage – ideally suited to the test lab environment

POLATIS® has significant advantages over other all-optical (OOO) and optical-electrical-optical (OEO) switching solutions in network test lab applications, including:

- The industry's lowest optical loss and superior performance in repeatability and stability, which are critical to ensuring the most accurate test data.
- The broadest range of symmetric and asymmetric matrix switches, essential to support the evolving needs of network test labs, with modular scalability to tens of thousands of fiber endpoints.
- True dark fiber switching, which requires no light to make and hold connections, and is critical when testing with low power signals, bidirectional or intermittent signals, and enables preprovisioning of future paths.
- A 'programmable shutter' feature, which enables the simulation of intermittent and repetitive fiber breaks to stress test system response to physical layer faults.
- Optional Optical Power Monitors, enabling users to measure the output power coming from devices under test.
- Optional integrated Variable Optical Attenuation (VOA), which enables rapid simulation of multiple link-loss and span-loss permutations.
- Switch partitioning securely in software, so multiple teams can use dedicated groups of connections on the same large switch without risk of interference, further saving on CAPEX.
- Easy integration of switches with test orchestration software to replicate tests and scripts, schedule tests across multiple organizations and coordinate with higher layer equipment and devices, as they support the broadest range of Software Defined Networking (SDN) and traditional network management interfaces, including TL1, SCPI, SNMP, NETCONF, and RESTCONF.
- Availability of product-specific drivers for many of the established test orchestration suites including Quali CloudShell, NETSCOUT® nGeniusONE® and Spirent Velocity® and Spirent iTest®, taking advantage of their ability to store and recall test configurations and topologies for even more efficiency.

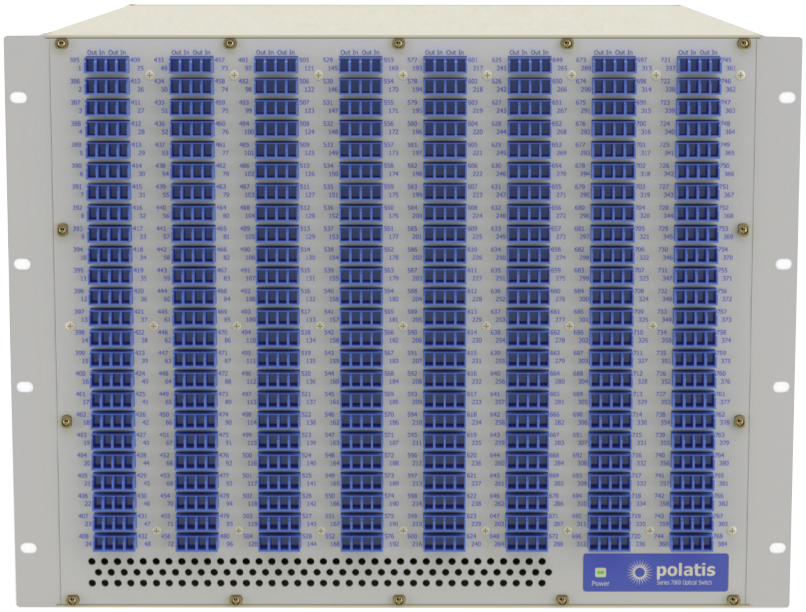

POLATIS® 7000 Series (384x384)

HUBER+SUHNER

The POLATIS team at HUBER+SUHNER has over 20 years of expertise in all-optical switching. With this extensive knowledge and experience, we actively drive the global evolution of network test lab automation.

In addition to POLATIS® optical circuit switches, HUBER+SUHNER offers a broad portfolio of best-in-class components and solutions for use in fiber optic and radio frequency applications.

HUBER+SUHNER
POLATIS® optical circuit switches
Americas: +1 781 275 5080
EMEA/Rest of World: +44 (0)1223 424200
info.polatis@hubersuhner.com
polatis.com
hubersuhner.com

4014/4115/04.2026

HUBER+SUHNER is certified according to ISO 9001, ISO 14001, OHSAS 18001, EN(AS) 9100, IATF 16949 and ISO/TS 22163 – IRIS.

Waiver
Facts and figures herein are for information only and do not represent any warranty of any kind.