Advancing software-controlled optical circuit switching

POLATIS®

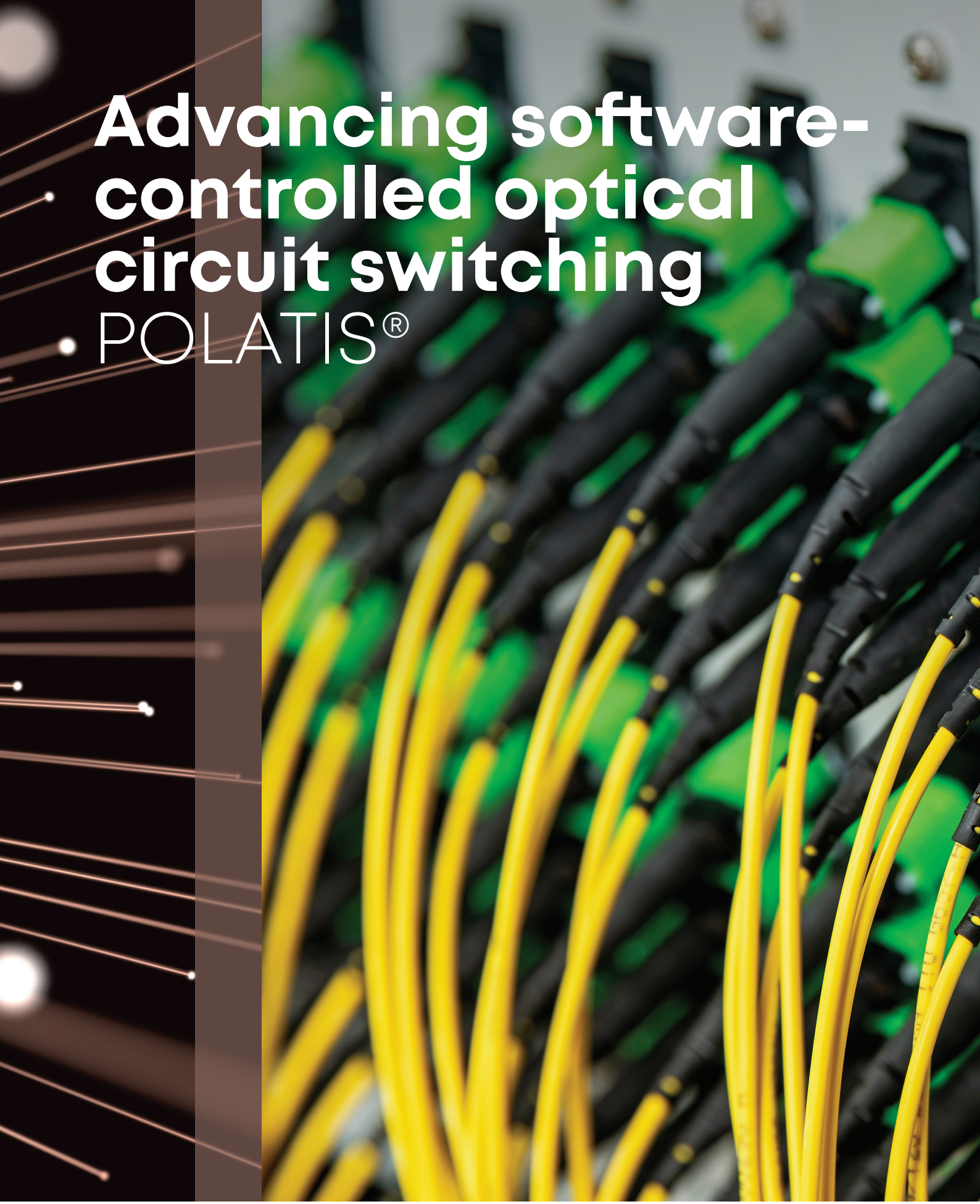

hubersuhner.com

HUBER+SUHNER

Introducing the POLATIS® range

Bring software-controlled optical circuit switching into your network to maximise the uptime and performance of your network. The POLATIS range combines decades of expertise with the latest technological advancements, enabling you to take a major leap towards an automated fiber layer.

The POLATIS range is equipped with our patented DirectLight™ technology, making it the only optical circuit switch that can hold dark fiber connections, enabling pre-provisioning and managing low or intermittent signals.

Software-controlled optical circuit switching

- Rapid provisioning, protecting, testing and monitoring of connections
- Elimination of human error
- Remote operations
- Reduced manpower costs

Maximised performance and uptime

- Minimal impact on overall system and network power budgets
- Maximised reliability, uptime, and switch availability
- Minimised energy footprint (compared to OEO switch)

Secure communications

- Light passes through switch unaltered
- Data not interrogated for routing
- Integration into host control system

A range that perfectly fits your needs

A wide range of sizes and configurations

Benefit from the widest selection of matrix sizes and configuration options on the market, ranging from 8x8 to 384x384. The many options make POLATIS suitable for every requirement and application.

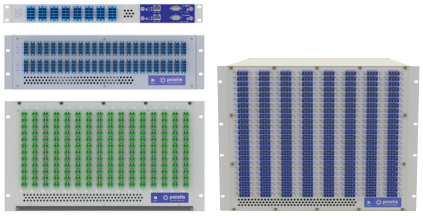

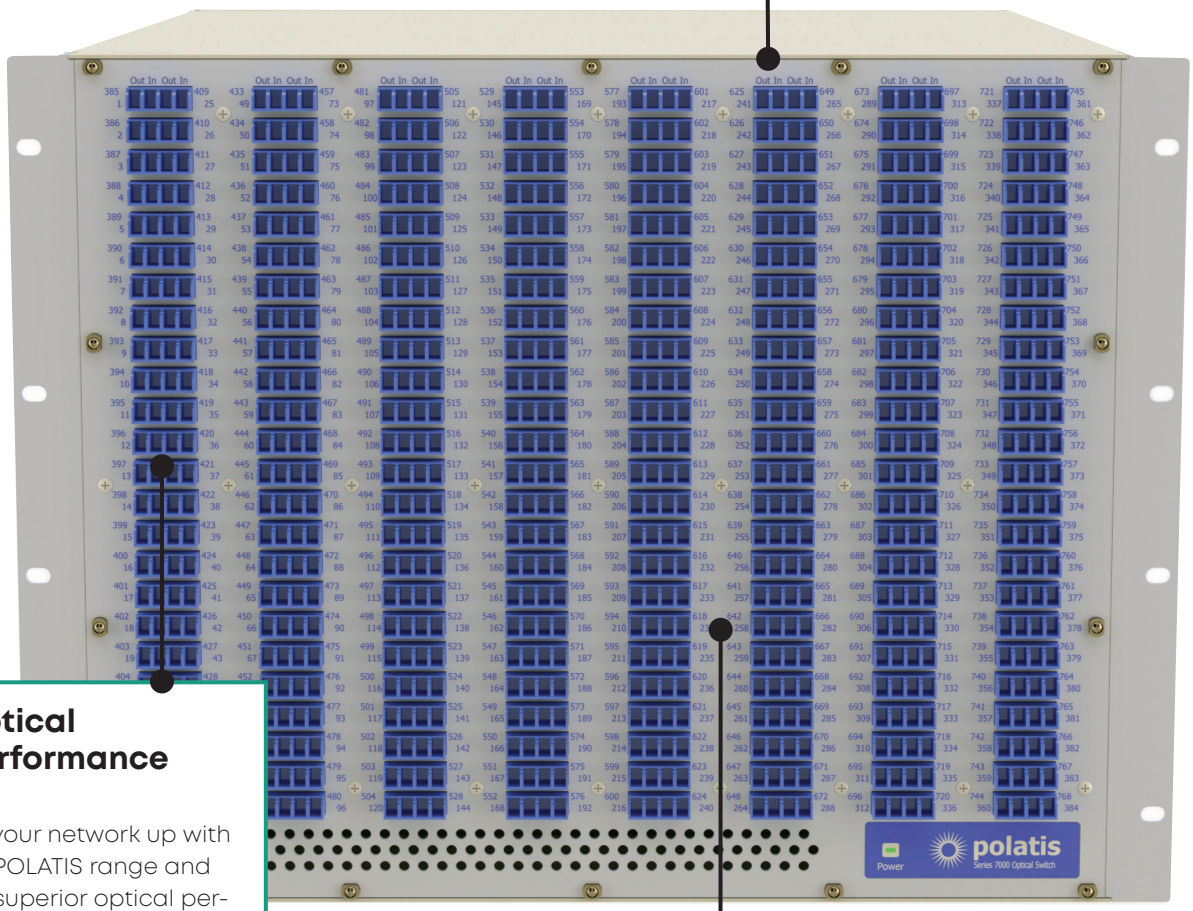

Optical performance

Set your network up with the POLATIS range and get superior optical performance with minimal insertion loss.

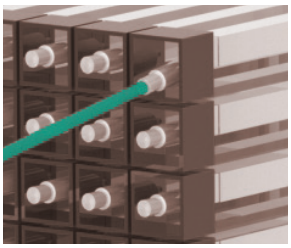

Network-ready

Deploy POLATIS in your production network right away, through in-built hardware redundancy, secure user management and integration with network control software.

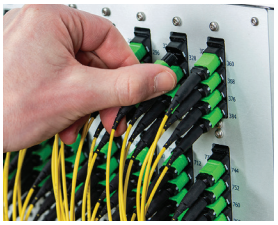

How optical circuit switching works

Optical circuit switches, also known as all-optical switches, are optical-to-optical-to-optical (OOO) switches and are highly efficient for rapidly switching large volumes of high-bit-rate traffic between fibers and for low-latency applications. By complementing optical-to-electrical-to-optical (OEO) switching in your network with OOO switching, you will create a strong and cost-efficient set-up that enables you to "switch when you can and route when you must".

OOO switches have a unique value proposition over traditional OEO switches, since they transmit the original input light signal through a transparent all-optical switch core – without converting it into an electrical signal and with minimal insertion loss. The transparent nature of OOO switches makes them protocol, format and data rate-agnostic.

Since they do not buffer or regenerate the optical signals, OOO switches have extremely low data latency compared to OEO switches.

Optical-to-optical-to-optical (OOO) switching principle

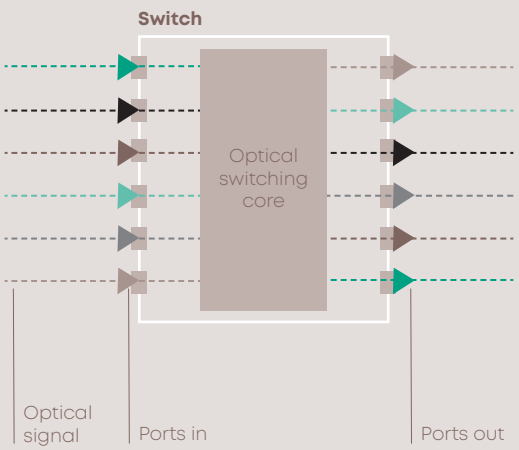

Optical-to-electrical-to-optical (OEO) switching principle

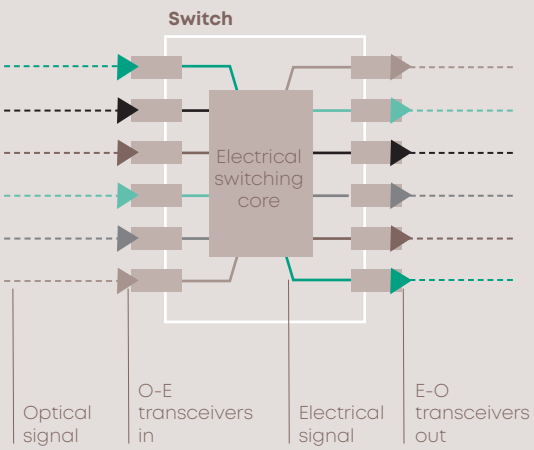

The value of optical circuit switching

An optical circuit switch enables your system to rapidly provision, protect, test and monitor vast quantities of cross-connections. This leads to maximised network uptime and increased efficiency. It also makes remote operations possible, which both reduces manpower costs and eliminates human error.

Lower total cost of ownership (TCO)

Optical circuit switching technology is future-proof, since it does not need to be upgraded or replaced as signal formats change and bit rates increase over time.

Software-defined networking (SDN)

Optical circuit switches make managing cross-connects in software-defined networks highly efficient. The switch provides the flexibility to adjust traffic flow, to accommodate increased demand while maintaining network security.

Low power consumption

With the environmental impact of data centers and IT infrastructure coming under increasing scrutiny, there are significant benefits to adopting a lower-power switching technology such as optical circuit switching wherever possible.

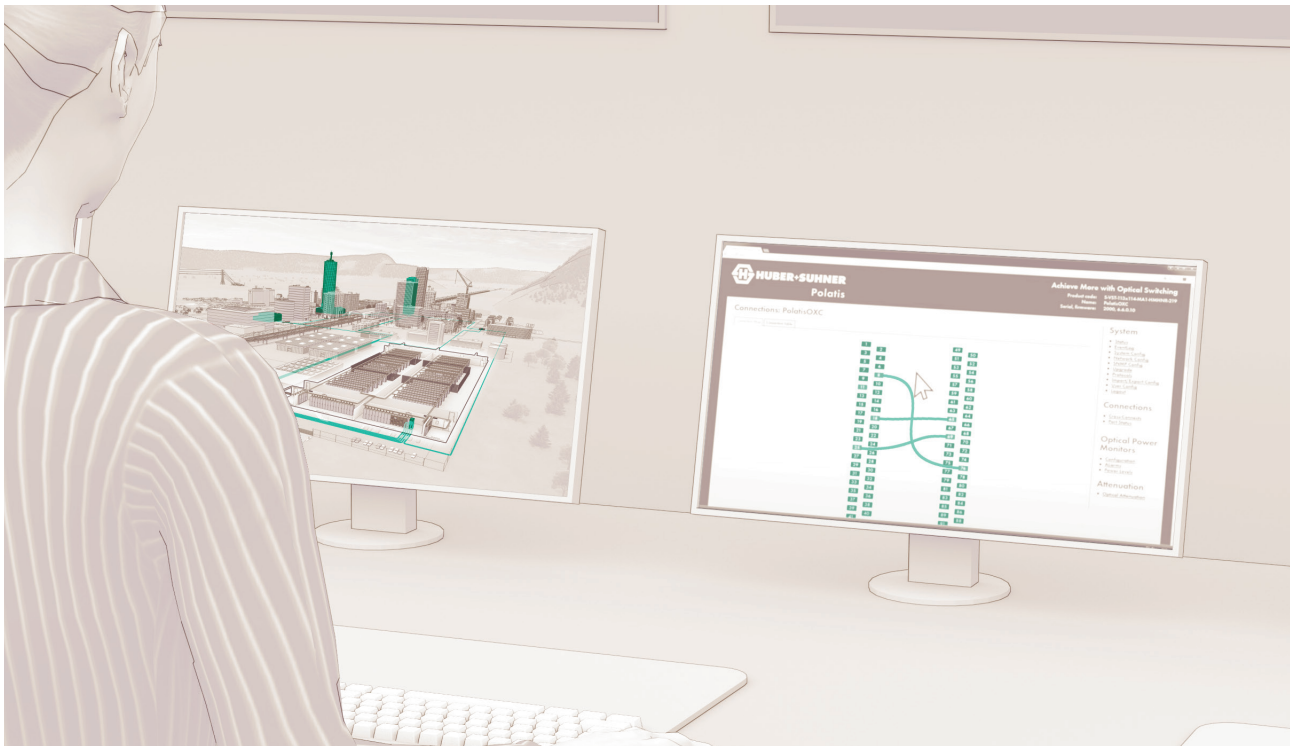

Applications

The POLATIS range can be deployed in various different applications to help ensure maximised uptime and performance.

Secure communications

Satellite ground station

Radio frequency over fiber (RFoF) increases transmission distance and security using fiber optic cable, at lower cost

Control room

Switches multiple signal types and protocols on common platform

Data center

Automated cage-to-cage provisioning

Automates Moves, Adds and Changes (MACs) to enable fast and dynamic provisioning and prevent fiber tray exhaustion.

Network disaggregation

Optical connection of disag-gregated compute and storage resources.

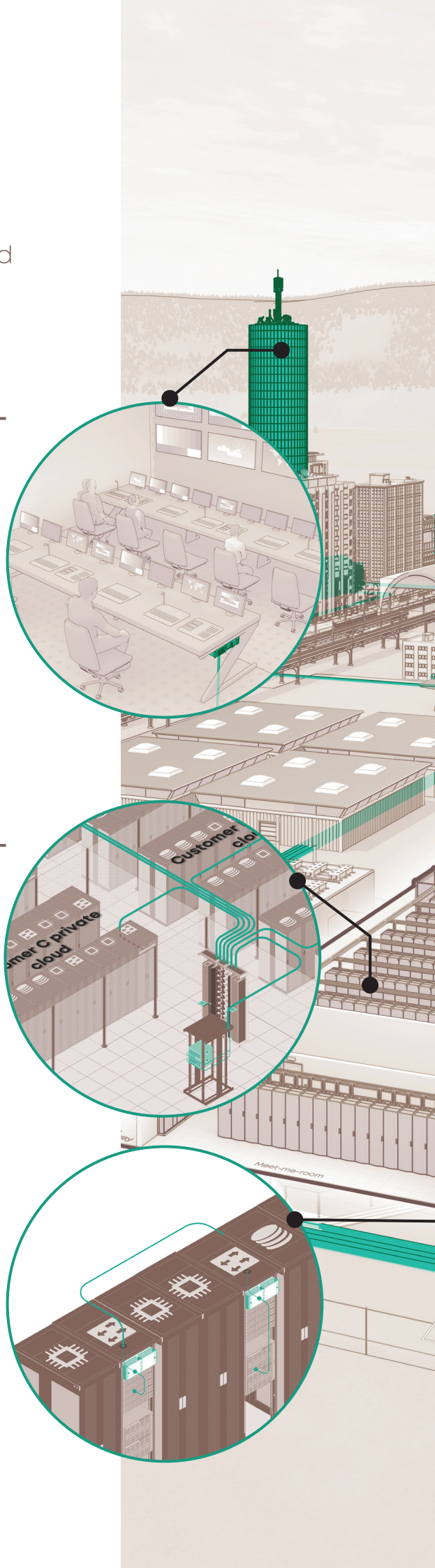

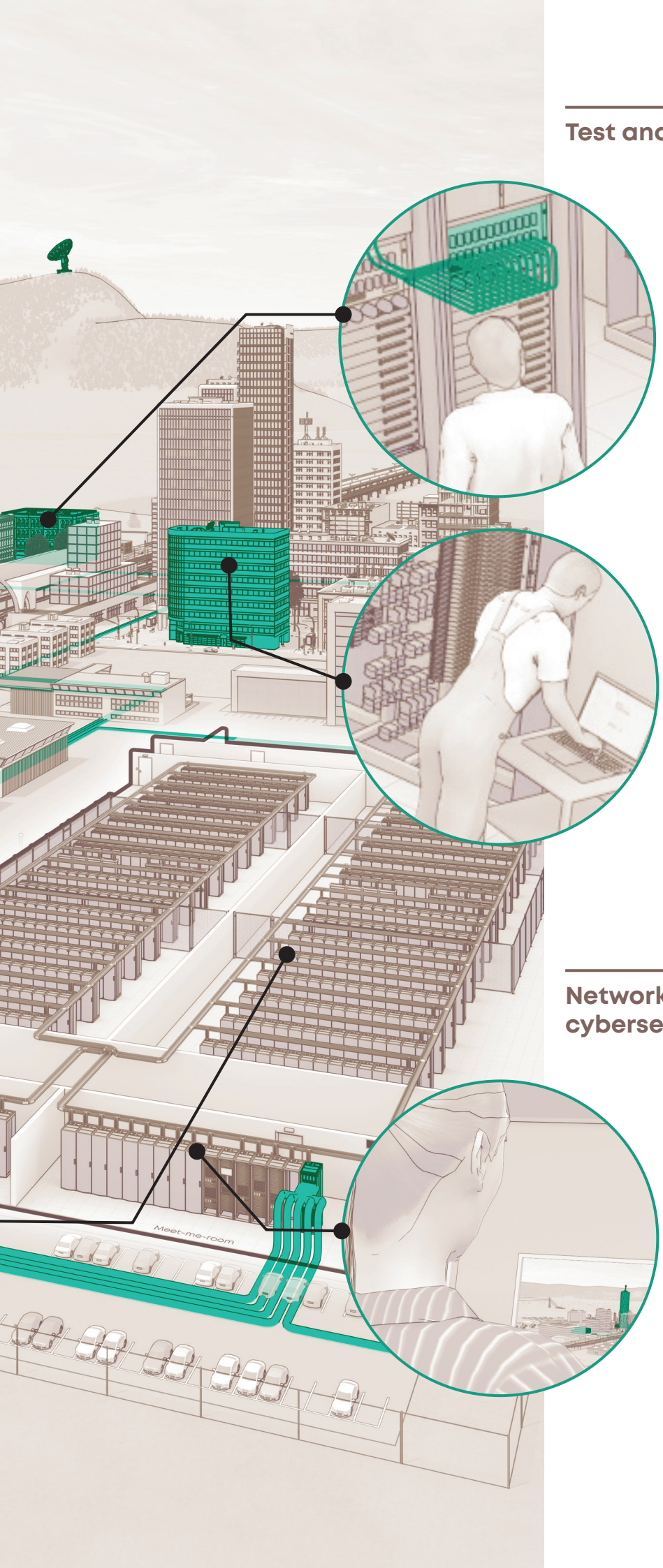

Test and measurement

Network test lab automation

Automates connections between devices during testing to optimise the use of expensive testing equipment, facilitate test routines and reduce manpower.

Optical production

Automates quality control testing of optical components to leverage expensive testing equipment and reduce manpower.

Network monitoring and cybersecurity

Network monitoring

Enables in-line monitoring of network performance and traffic flows.

Cybersecurity

Connects multiple network probes to a limited set of expensive monitoring equipment looking for data streams of interest as well as cyber threats.

Data center

POLATIS offers software-controlled optical circuit switches for provisioning, protecting and monitoring within colocation, hyperscale and telecoms data centers and in broadcasting production centers. Being SDN-enabled, these solutions can be integrated into almost any network operating control system.

Some common scenarios in data centers where POLATIS optical circuit switches provide higher value over available alternatives:

Automated cage-to-cage provisioning

Problem
The typical meet-me-room has thousands of manually created interconnections. Adding more is a complicated challenge without automating a subset.

Alternative
Increasing the amount of fiber, which leads to fiber tray exhaustion and higher costs.

Value
Automate MACs to enable fast and dynamic provisioning that improves customer service and prevents fiber tray exhaustion.

Network disaggregation

Problem
Unbalanced, varying demand on compute and storage resources drives inefficiencies and higher CAPEX.

Alternative
Increase resources to match peak demand.

Value
Optically connect and switch between disaggregated resources for optimal match between workload demand and resource availability.

POLATIS applications

Test and measurement

Components, devices and even entire networks need to be tested and certified prior to deployment in order to maintain uptime and client satisfaction. POLATIS switches interface with leading test automation solutions, enabling expensive testing equipment to be used more efficiently and removing people and delays from the lab environment.

Network test lab automation

Problem
Connecting multiple testing targets to numerous testing devices to provide certification for use in a live environment.

Alternative
Introducing extra test equipment and work with manual patching.

Value
Automate connections between devices during testing to optimise the use of expensive testing equipment, facilitate testing routines and reduce manpower.

Optical production

Problem
Validating at the point of manufacturing that the component meets the set specifications.

Alternative
Setting up manual operations.

Value
Automate quality control testing of optical components to leverage expensive testing equipment and reduce manpower.

Secure communications

Transmission and switching of radio frequency (RF) and video/audio signals running multiple protocols across coax networks requires the deployment of expensive equipment. Conversion of these signals to run over lower-cost optical fiber together with optical circuit switches enables them to be handled efficiently and securely, as the switches are agnostic to protocol and data rate, and overcomes transmission distance constraints.

Satellite ground station

Problem
RF transmission over coax limits bandwidth and distance between antennae and control room

Alternative
Install expensive amplifiers and signal conditioning.

Value
RFoF enables greater transmission distances on less expensive cables with greater security.

Control room

Problem
Efficiently managing and switching multiple video and audio input formats.

Alternative
Working with proprietary equipment for each format.

Value
Seamlessly switch all formats over optical fiber and future-proof against protocol changes.

Network monitoring and cybersecurity

Monitoring and managing the ever-increasing variety of formats and volume of traffic in their network poses significant challenges for network operators. The POLATIS switches interface with leading monitoring and cybersecurity solutions, enabling operators to automate these processes to improve their ROI while still complying with all legal requirements.

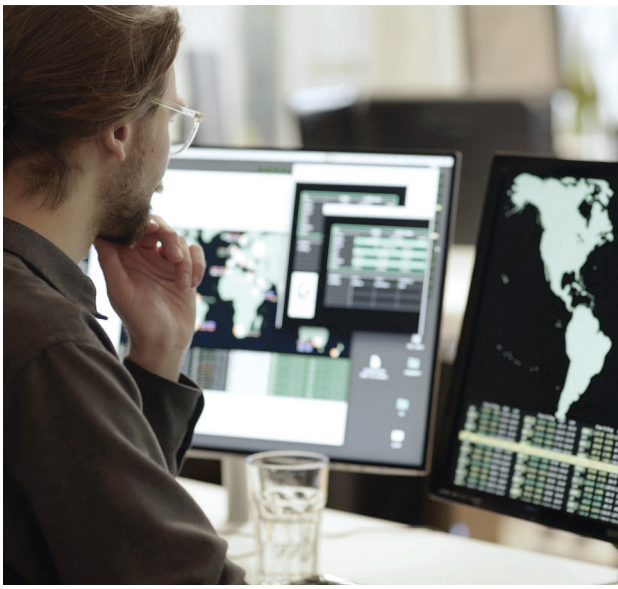

Network monitoring

Problem
Efficiently monitoring vast volumes of traffic to manage the performance of the network and traffic flows.

Alternative
Adding more analysis equipment to monitor connections on a one-to-one basis.

Value
Enable in-line monitoring of network performance and traffic flows.

Cybersecurity

Problem
Effectively examining network and traffic flows to support law enforcement and protect against cyber threats.

Alternative
Adding more analysis equipment to examine connections on a one-to-one basis.

Value
Connect multiple network probes to a limited number of network devices looking for data streams of interest as well as cyber threats.

Features

The POLATIS range offers the widest selection of port counts and connector types on the market and provides added-value options such as optical power monitoring, variable optical attenuation and fiber break stimulation for network testing. Each switch is designed to fit into the minimum rack height possible and features dual redundant power supplies, network interface cards and fans for maximum uptime and mission-critical reliability.

True transparency

- All-optical core with DirectLight™ technology
- 1270–1675nm wavelength
- Bidirectional optics
- Dark fiber for low-/no-signal connections
- Protocol and bit rate-agnostic DC to 400Gbs+
- DWDM, RF, coherent

Optical power monitoring options

- Loss/degradation of signal alarms
- Automated protection switching
- Variable optical attenuation

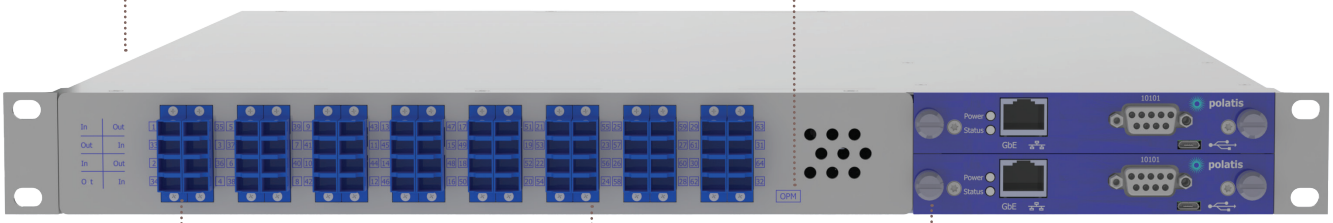

Connectors

- LC, LC HD, FC, SC, MTP
- Front or rear patch panel
- Sizes from 8x8 to 384x384

Power

- 100-240 VAC, 48 VDC
- Dual redundant hot-swap power supplies

Control features

- Dual redundant hot-swap network interface cards
- Web UI, SNMP, TL1, SCPI
- NETCONF and RESTCONF SDN interfaces
- RADIUS, LDAP, audit logs, service automation support

POLATIS ULTRA
Further testing the limits

POLATIS switches up to 96x96 port count are also available with Ultra performance, a level of precision that is ideal for testing and measurement applications. POLATIS ULTRA switches offer even lower insertion loss and feature more accurate optical power monitors for higher sensitivity plus a fiber break simulation feature.

The patented DirectLight™ optical switch technology

The POLATIS optical switching core does not rely on moving parts such as robotic arms or MEMS-mounted mirrors to create and maintain optical connections.

Instead, the HUBER+SUHNER-patented DirectLight™ beam-steering technology makes connections using compact piezo-electric actuators to align collimated beams of light from opposing arrays of input and output fibers with minimal loss, distortion or interference between paths. Alignment is maintained using feedback from integrated position sensors to ensure connection stability over time, temperature and external disturbances.

This means that, in contrast to other OOO switches, the POLATIS switching occurs completely independently of the power level, colour or direction of light on the path. This enables the switch to hold optical connections on unlit paths, which permits the pre-provisioning of dark fibers, and allows bidirectional transmission.

With its DirectLight™ optical switch technology, the POLATIS enables transparent, proven and robust connections, even on dark fiber.

The DirectLight™ beam-steering technology sets the industry standard for highest performance and lowest optical loss.

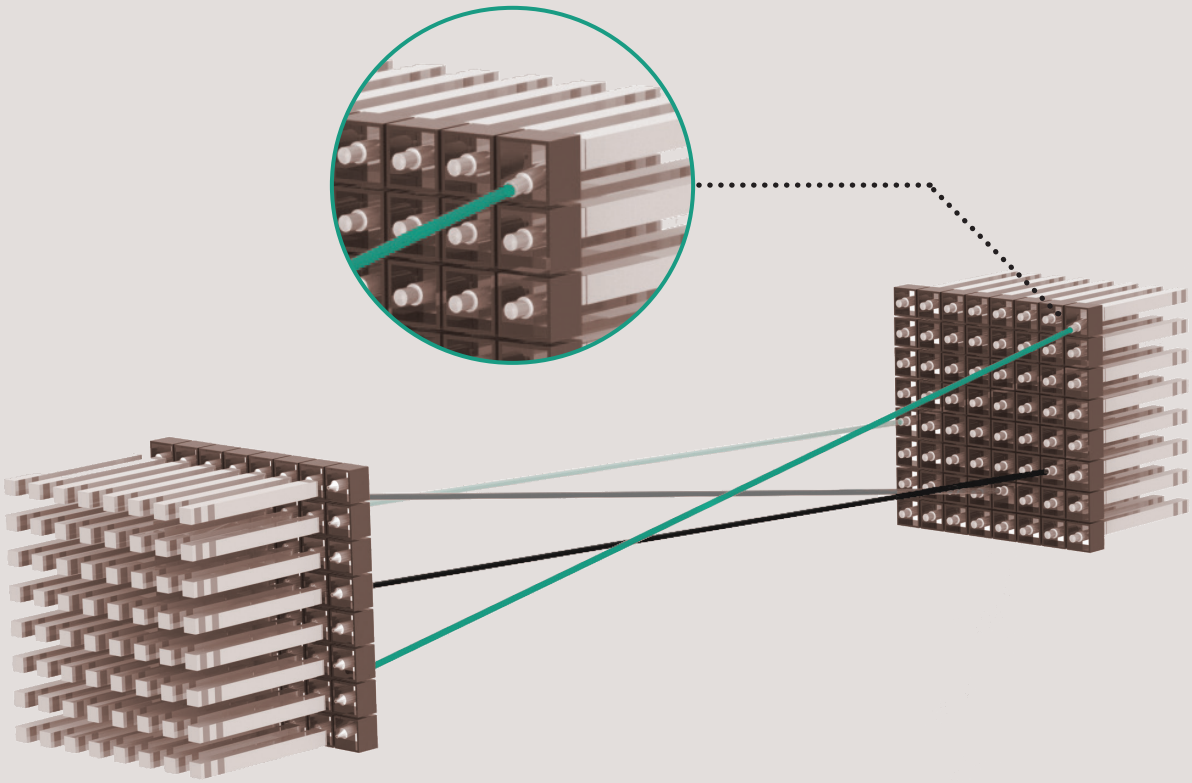

Legacy, expertise and global support

The POLATIS team at HUBER+SUHNER has over 20 years of expertise in optical circuit switching. With this extensive knowledge and experience, we actively drive the global evolution of software-defined networks.

Work with our knowledgeable global team of experts to receive guidance on the optimal POLATIS configuration for your specific application. We'll help you select the right switch and advise you on your software integration.

Our team also tracks leading-edge applications such as high-performance computing, disaggregation, AI and quantum technologies so you can take full advantage of all the latest developments.

We offer round-the-clock support to quickly and smoothly diagnose your switch remotely, and seamlessly send you the requisite parts and upgrades. Our factory-trained service centers also provide efficient repair services for more complex issues.

We'll be there for you throughout your switch's life cycle. We also offer extended warranty packages for additional peace of mind.

And our global footprint brings and keeps us close to our customers all over the world.

nanosystec
PRECISION AUTOMATION
NANOWELD

About HUBER+SUHNER

We are a leading global supplier of components and systems solutions. With our broad range of products and our extensive expertise, we serve the industry, communications and transportation markets with applications from the three technologies of radio frequency, fiber optics and low frequency. And as a global company with a presence in over 80 countries, we're always close to our customers.

4014/4115/04.2026

HUBER+SUHNER Polatis Limited
332/2 Cambridge Science Park
Cambridge CB4 0WN
United Kingdom

+44 (0)1223 424200
info.polatis@hubersuhner.com

www.polatis.com